

TA3301NA-C Module Datasheet V1.0

Beijing Jia An Electronics Technology Co., Ltd.

Contents

History..... 1

Module Name Information.....2

Features..... 3

Applications.....3

Description..... 4

Specifications.....4

Block Diagram.....5

Recommended PCB Layout for Package.....5

Mechanical Drawing.....6

Terminal Description.....7

Reference Schenatics.....9

PCB Design Reference.....9

Recommended Reflow Profile for Lead Free Solder.....10

Package.....11

Contact Details.....12

History

Date	Version	Description	Draft	Approval
2025/2/25	V1.0	Initial Release	Fangao	Jessy

Module Name Information

TA - 3301 - NA - C

Module Type: Things Air	Chip Type : CC3301ENJARSBR	Antenna Type : NA：No Antenna	PCB Version:C

Features

Key Features

- Wi Fi 6 (802.11ax)
- Low power Bluetooth 5.4 in CC3301 devices
- Supporting IC for any processor or MCU host that can run the TCP/IP stack
- Integrated 2.4 GHz PA,suitable for a complete wireless solution with output power up to+20dBm.
- Application throughput up to 50Mbps

Extended Features

- Wi Fi 6
  - 2.4GHz, 20MHz, single spatial stream
  - MAC, baseband, and RF transceivers supporting IEEE 802.11 b/g/n/ax
  - Target Wakeup Time (TWT), OFDMA, MU-MIMO
  - (Downlink), basic service set coloring, and triggering frames can improve efficiency - hardware based encryption and decryption, supporting WPA2 and WPA3
  - Excellent interoperability
  - Supports 4-bit SDIO or SPI host interfaces
- Low power Bluetooth 5.4
  - LE encoding PHY (long-distance), LE 2M PHY (high-speed), and broadcast extension
  - Host Controller Interface (HCI) transmission with options for UART or shared SDIO
- Enhanced security
  - Secure Host Interface
  - Firmware authentication
  - Anti rollback protection
- Multirole support (for example, concurrent STA and AP) to connect with Wi-Fi devices on different RF channels (Wi-Fi networks)
- Optional antenna diversity or selection
- 3-wire or 1-wire PTA for external coexistence with additional 2.4-GHz radios (for example, Thread or Zigbee)
- Power Management
  - V_{MAIN}、V_{IO}、V_{pp}: 1.8 V
  - V_{PA}: 3.3 V
- Clock Sources
  - 40MHz XTAL fast clock
  - Internal LFOSC or external 32.768kHz slow clock

Applications

- Grid infrastructure
  - Electricity meter
  - String inverter
  - Micro inverter
  - Energy Storage Power Conversion System (PCS)
  - Electric Vehicle Charging Infrastructure
- Building and Home Automation
  - HVAC controller
  - HVAC gateway
  - Thermostat
  - Building Security Gateway
  - Garage door system
  - IP webcam/visual doorbell
  - Wireless security camera
- Electrical appliances
  - Refrigerators and freezers
  - Oven
  - Washing and drying machines
  - Residential water heaters and heating systems
  - Air purifiers and humidifiers
  - Coffee machine
  - Air conditioning indoor unit
  - Sweeping robot
  - Mower robot
- Medical
  - Infusion pump
  - Electronic hospital bed and bed controller
  - Multi parameter patient monitor
  - Blood pressure monitor
  - CPAP ventilator
  - Remote healthcare system
  - Ultrasonic scanner
  - Ultrasonic intelligent probe
  - Electric toothbrush
- Retail automation and payment
- Print

Description

The TA3301 is a 2.4GHz Wi-Fi 6 and Bluetooth low energy 5.4 combination SiP (System in Package) module to support 1×1 IEEE 802.11b/g/n/ax WLAN standards and BLE 5.4, enabling seamless integration of WLAN/BLE and low-energy technology. This module is based on TI CC3301 single-die chip that WLAN function is connected to the host processor via a SDIO interface, and the Bluetooth is connected via a UART interface

Specifications

Parameter			Min	Typ	Max	Unit
Operating Voltage(V_{MAIN}、V_{IO}、V_{pp})			1.6	1.8	2.0	V
Operating Voltage(V_{PA})			3.0	3.3	3.6	V
Operating Temperature			-20	-	+70	℃
Current Consumption	Sleep Mode	Shutdown mode all functions shut down	-	12	-	uA
		WLAN sleep mode		220		uA
		Bluetooth sleep mode		170		uA
	Receive mode		-	69	-	mA
	Transmit Mode		-	238	-	mA
TX Power	WLAN mode（1DSSS）		-	16.5	-	dBm
	Bluetooth mode（GSFK）		-	11.7	-	dBm
RX Sensitivity	WLAN mode（1DSSS）		-	-95	-	dBm
	Bluetooth mode（GSFK）		-	-92.2	-	dBm

Block Diagram

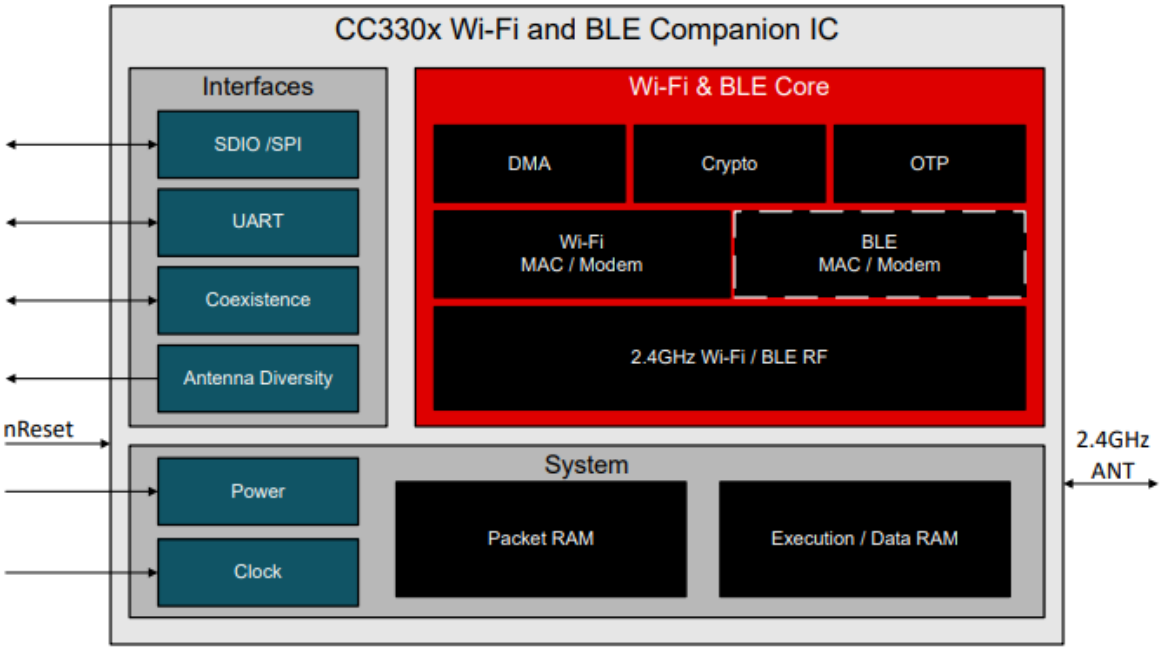

Recommended PCB Layout for Package

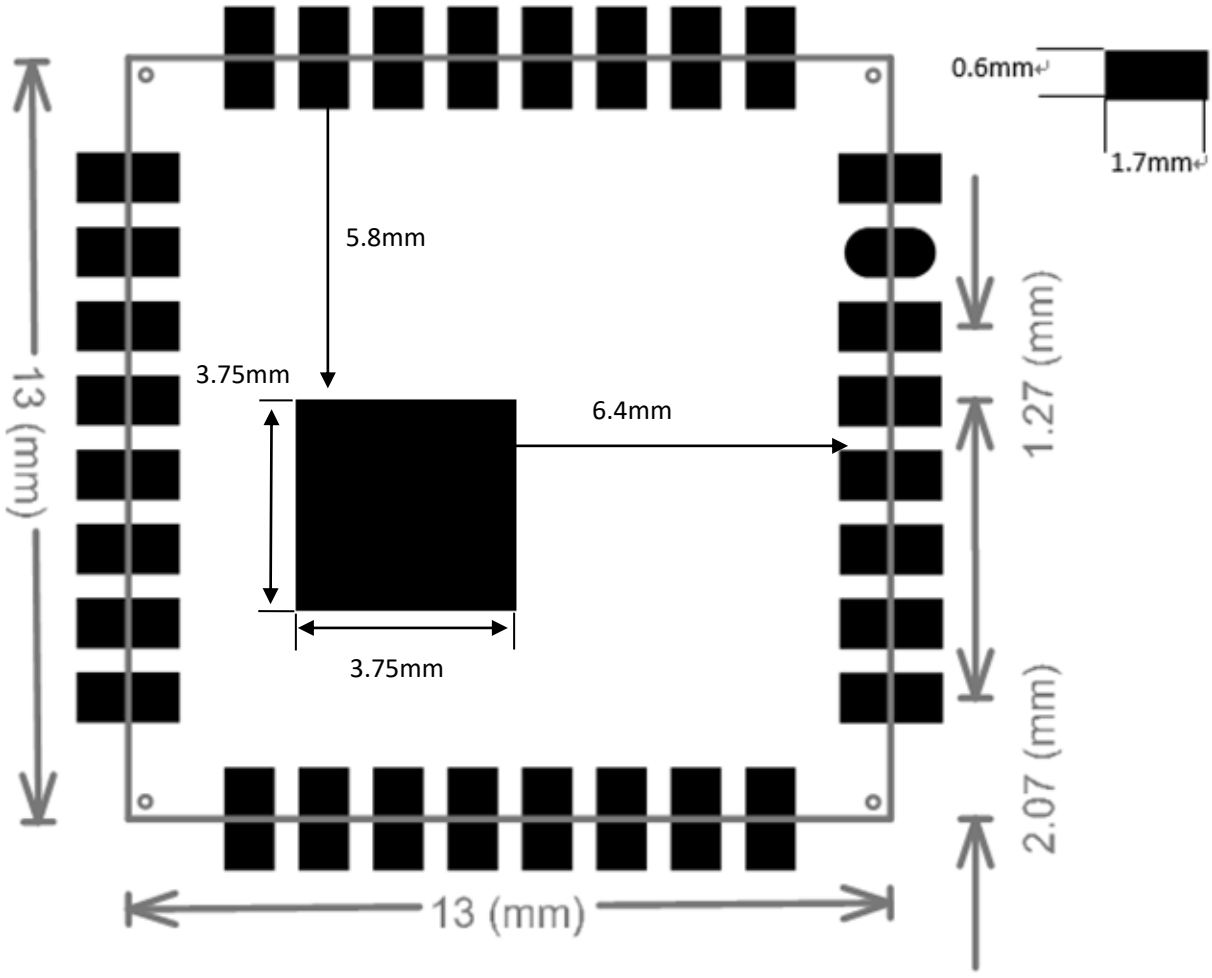

Mechanical Drawing

TA3301NA-C

H=3.0mm

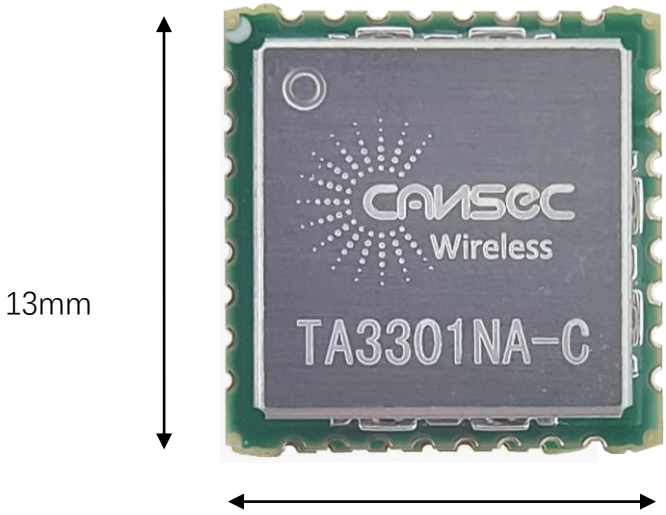

Unit: mm

Tolerance: ±0.2mm

Terminal Description

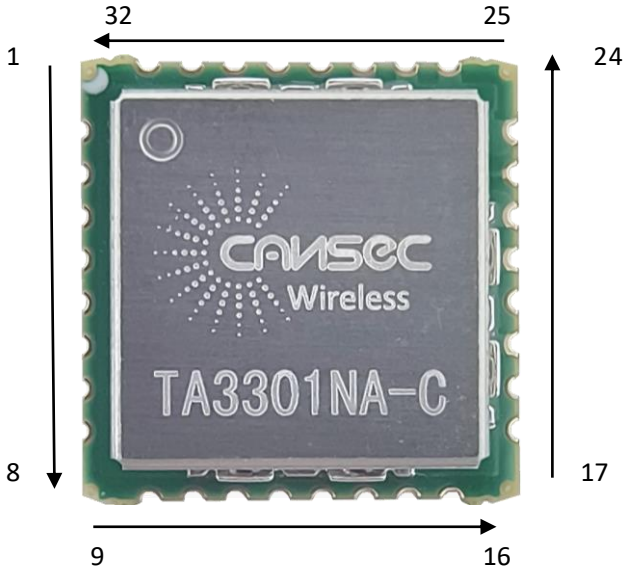

Pin	Signal Name	Type / Dir	VIO Level	Shutdown State	State After Power-up	Description
1	UART RTS	O	1.8 V	PU	PU	UART RTS for Flow Control for Bluetooth Low Energy HCI
2	UART CTS	I	1.8 V	PU	PU	UART CTS for flow control for BLE HCI
3	UART RX	I	1.8 V	PU	PU	UART RX for BLE HCI
4	UART TX	O	1.8 V	PU	PU	UART TX for BLE HCI
5	SDIO CMD	I/O	1.8 V	HiZ	HiZ	SDIO_CMD_WL (SPI_DIN)
6	SDIO CLK	I	1.8 V	HiZ	HiZ	SDIO_CLK_WL (SPI_CLK). Must be driven by host
7	SDIO_D3	I/O	1.8 V	HiZ	HiZ	SDIO_D3_WL (SPI_CSX)
8	SDIO_D2	I/O	1.8 V	HiZ	HiZ	SDIO_D2_WL
9	SDIO_D1	I/O	1.8 V	HiZ	HiZ	SDIO_D1_WL.
10	SDIO_D0	I/O	1.8 V	HiZ	HiZ	SDIO_D0_WL (SPI_DOUT)
11	SWCLK	I	1.8 V	PD	PD	Serial Wire CLK
12	SWDIO	I/O	1.8 V	PU	PU	Serial Wire DIN/DOUT
13	Logger	O	1.8 V	PU	PU	Tracer (UART TX Debug Logger)
14	Host_IRQ_WL	O		PD	0	IRQ_WL to Host
15	Host_IRQ_BLE	O		PD	PD	IRQ_BLE to Host (in shared SDIO mode)
16	nRESET	I	1.8 V	PD	PD	Reset line for enabling / disabling device (active low. External pull-up Resistor).
17	Slow_CLK_IN	I	1.8 V	PD	PD	RTC Clock 32.768 KHz
18	Fast_CLK_REQ	O		PD	PD	Fast Clock Request from the device
19	GND	GND	0V			GND
20	PA_LDO_IN	POW	3.3V			3.3-V Supply for Power Amplifier
21	GND	GND	0V			GND
22	GND	GND	0V			GND

23	RF_BG_A	ANA				Bluetooth Low Energy and WLAN 2.4-GHz RF port
24	GND	GND	0V			GND
25	GND	GND	0V			GND
26	GND	GND	0V			GND
27	GND	GND	0V			GND
28	VDD_1V8	POW	1.8 V			1.8-V Device Supply Input
29	GRANT	O	1.8 V	PD	PD	External Coexistence Interface - Grant
30	PRIORITY	I	1.8 V	PD	PD	Connect to MAIN DC2DC 1.8-V out. Requires 10-µF capacitor to GND
31	REQ	I	1.8 V	PU	PU	External Coexistence Interface - Priority
32	ANT_SEL	O	1.8 V	PD	PD	Antenna Select Contro

1. GPIOs may be used as alternate locations for digital signals (for example, COEX_GRANT, COEX_PRIORITY, COEX_REQ, or ANT_SEL).
2. See software release notes for support level.
3. Host must provide PU using 10-kΩ resistor for all non-CLK SDIO signals.

Reference Schematics

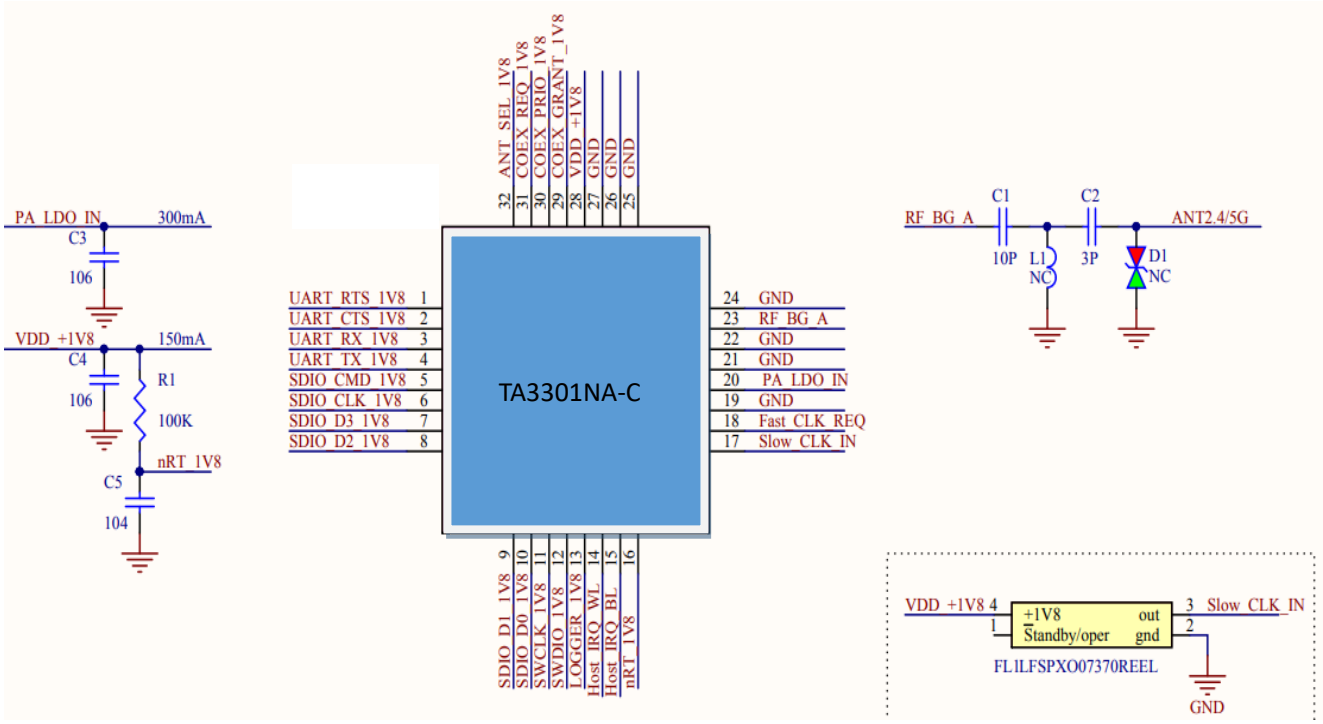

PCB Design Reference

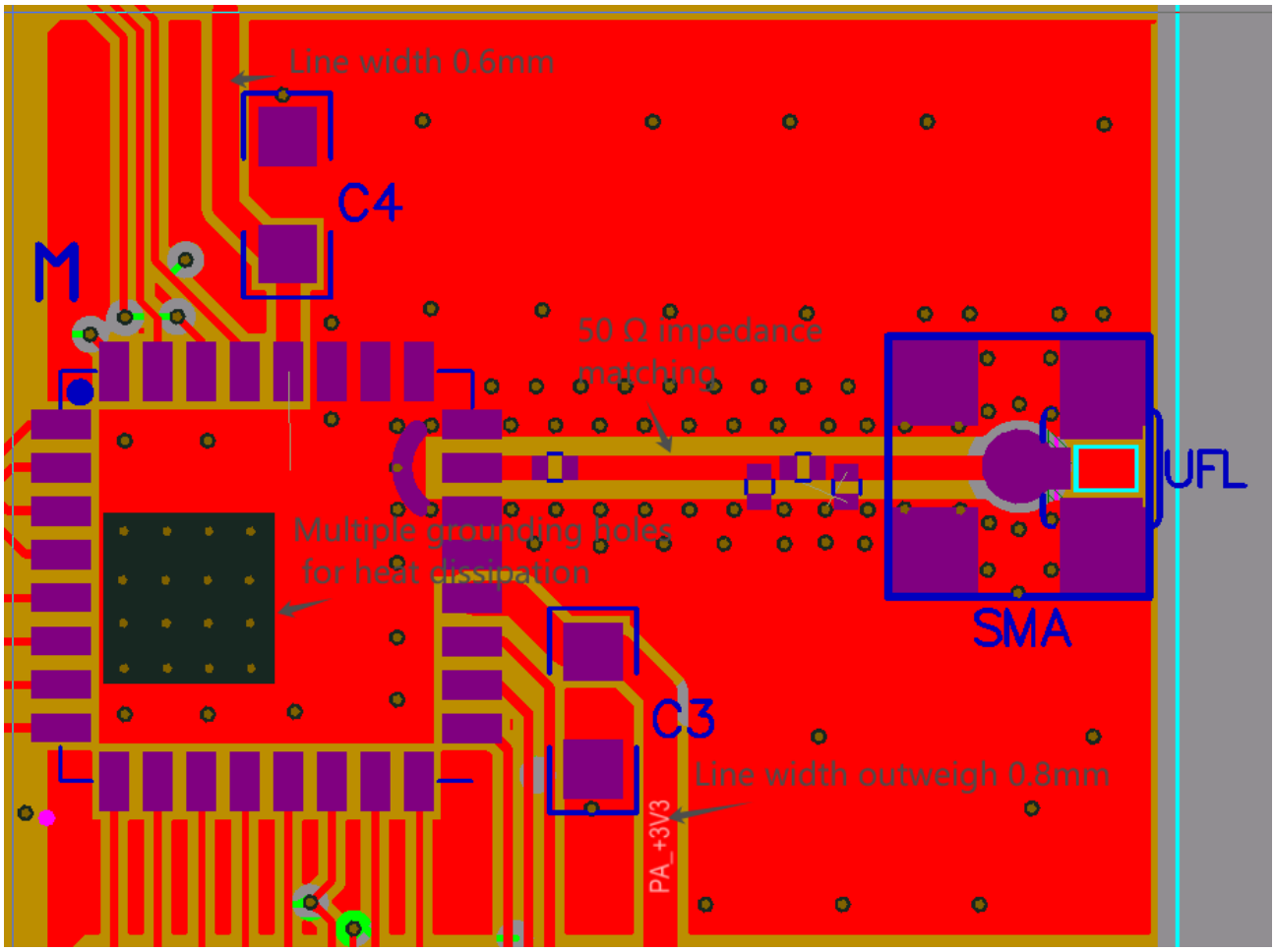

Recommended Reflow Profile for Lead Free Solder

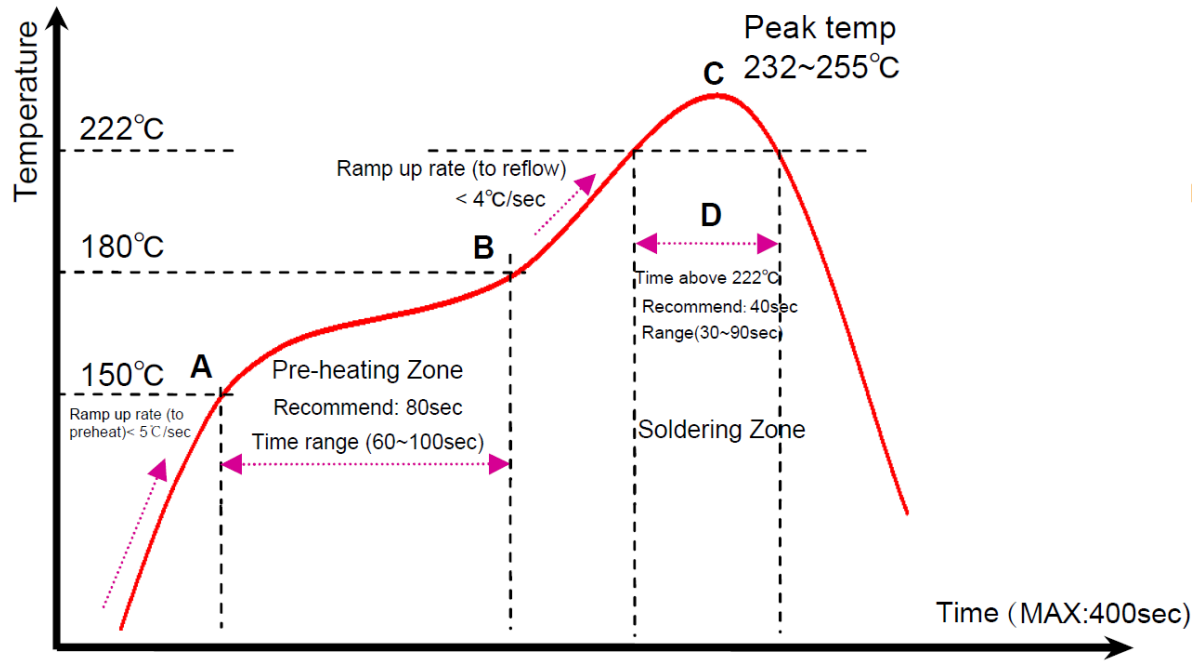

Package

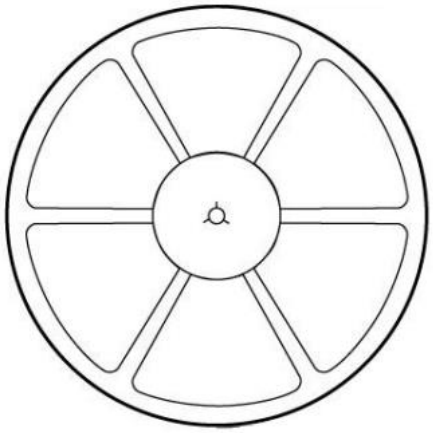

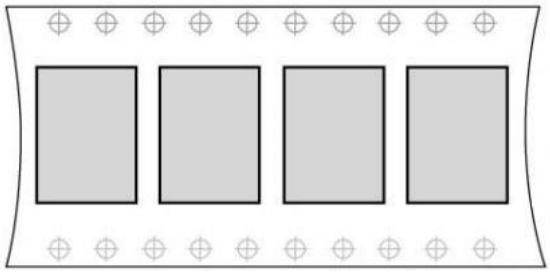

- Tape and Reel
- Helical antenna version Module exception
- Note：For package, we have three package types: Reel, Tray, Simple way for choosing, depend on customer's request or quantity request

Contact Details

Tel: +86-10-6888 9971

Email: sarolyn@rf-products.com

grace@rf-products.com

norman@rf-products.com

Technical Support: tech@rf-products.com

Addr.: Rm.1002, Block B China Railway Venture building,

No.28 Pingguoyuan Rd., Shijingshan District, Beijing, 100041, China.

Website: www.rf-products.com

http://www.rf-products.com

https://cansec.en.alibaba.com/

http://shop144152941.taobao.com/