

WFHL6108 Module Datasheet V1.0

Wi-Fi HaLow / IEEE 802.11ah

Sub-1 GHz 1/2/4/8MHz Bandwidth

MAC / PHY / Radio Transceiver

Beijing Jia An Electronics Technology Co., Ltd.

CONTENTS

History....1
Features....2
Applications....3
Description....3
Block Diagram....4
Module Name Information....4
Specifications....5
Mechanical Drawing....6
Terminal Description....7
Power Supply Requirements....9
SDIO Host Requirements....9
SPI Host Requirements....10
Digital Interfaces....12
RF Specifcations....12
Reference Schematics....13
Recommended PCB Layout for Package....14
Recommended Reflow Profile for Lead Free Solder....15
Package....16
Contact Details....17

History

Date	Version	Description	Draft	Approval
2026-5-22	V1.0	Release	Keytone	Jessy

Features

Ultra-long-range, low-power Wi-Fi HaLow module for IoT applications:
Single-stream max data rate of 32.5 Mbps (MCS=7, 64-QAM, 8 MHz channel, 4μs GI)
Radio supporting worldwide Sub-1 GHz frequency bands

- Frequency range: 850-950 MHz
- Channel bandwidth options of 1/2/4/8 MHz
- Max output power: 22 dBm

802.11ah OFDM PHY

- BPSK & QPSK, 16-QAM & 64-QAM Modulation
- Automatic frequency & gain control
- Packet detect & channel equalization
- Forward Error Correction (FEC) coding & decoding
- Supports Modulation and Coding Scheme (MCS) levels MCS 0-7 and MCS 10
- Supports 1 MHz duplicate mode
- Supports optional Traveling Pilots and Short Guard Intervals

802.11ah MAC supporting WFA HaLow certification

- Support for STA and AP roles
- Listen-Before-Talk (LBT) access with energy detect
- 802.11 power save
- 802.11 fragmentation and defragmentation
- Packet aggregation
- Power-Saving Target Wake Time (TWT) support for long battery life
- Restricted Access Window (RAW)
- Automatic and manual MCS rate selection

SDIO 2.0 compliant slave interface

- SDIO 2.0 Default Speed (DS) at 25 MHz
- SDIO 2.0 High Speed (HS) at 50 MHz
- Support for both 1-bit and 4-bit data mode
- Support for SPI mode operation

Power Management Unit (PMU) for various modes of operation

- Power-down (interrupt-driven wake)
- Hibernate mode (internal/external wake)
- Active Receive / Transmit mode
- Integrated DC-DC converter supporting a voltage supply from 3.0V to 3.6V

RF Interface

- Wide supply voltage range 3.0V to 3.6V

Wide spectrum of security features

- AES encryption engine
- Hardware support for SHA1 and SHA2 hash functions (SHA-256, SHA-384, SHA-512)
- WPA3, including protected management frames (PMF)
- Opportunistic Wireless Encryption (OWE)

Applications

For Internet of Things (IoT) and Machine-to-Machine (M2M) applications such as:

- Surveillance Cameras and Sensors
- Building Automation Systems (BAS)
- Building Access Control & Security
- Industrial Automation Controls
- Smart Home Automation
- Smart City Networks

Description

The WFHL6108 is designed based on MM6108 transceiver. It offers long-range, low-power consumption, and superior RF performance.

The MM6108 transceiver is a single-chip solution that includes Radio, PHY, and MAC functions compliant with the IEEE 802.11ah standard and supports data rates up to 32.5 Mbps. The radio in the MM6108 supports programmable operation between 850 MHz and 950 MHz.

The MM6108 has been designed for a simplifi ed Wi-Fi HaLow connection to an external host.

The RF receiver features a high linearity LNA, making external fi lters unnecessary in many applications.

MM6108 supports security features required for Wi-Fi HaLow product certifi cations.

A combination of features in the MM6108 supports battery-operated applications. The IEEE 802.11ah standard provides extended sleep times of battery-operated Stations (STAs or client devices), with longer durations than other prior IEEE 802.11a/b/g/n/ac generations. It also allows longer extended maximum idle times for clients to conserve energy without being removed from the Access Point’s list of authenticated devices.

Block Diagram

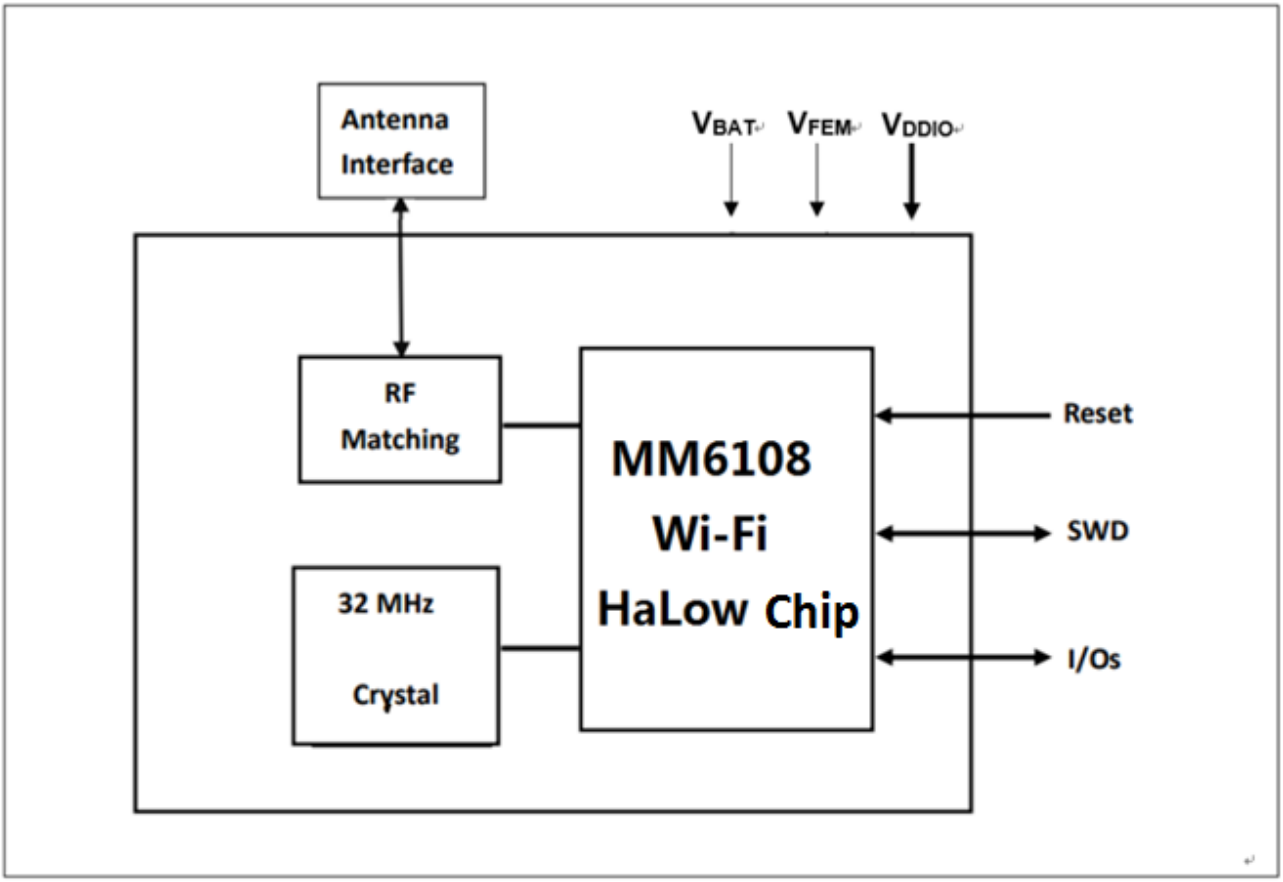

Module Name Information

WFHL - 6108 - UA - A

Module Type: Wi-Fi HaLow	Chip Type : MM6108IQ	Antenna Type: UA: UFL Connector NA: No Antenna	PCB Version: A: JP B: US

Specifications

Condition:T_A=25℃， V_{BAT}/V_{DDIO} = 3.3V $V_{DD/FEM}$ =3.3V

WFHL6108UA-A:

Parameter		Min	Typ	Max	Unit
Operating Voltage		3.0	3.3	3.6	V
Operating Temperature		-20	25	70	℃
Current Consumption	Sleep Mode(Deep sleep)		2.5		uA
	Receive mode(Mcs0 8M)		35		mA
	Transmit Mode(Mcs0 8M)	-	115	-	mA
TX Power (Mcs0 8M)		-	-	14	dBm
RX Sensitivity(Mcs0 8M bpsk)		-	-105	-	dBm
Distance		-			m

WFHL6108UA-B:

Parameter		Min	Typ	Max	Unit
Operating Voltage		3.0	3.3	3.6	V
Operating Temperature		-20	25	70	℃
Current Consumption	Sleep Mode(Deep sleep)		2.5		uA
	Receive mode(Mcs0 8M)		35		mA
	Transmit Mode(Mcs0 8M)	-	195	-	mA
TX Power (Mcs0 8M)		-	-	22	dBm
RX Sensitivity(Mcs0 8M bpsk)		-	-105	-	dBm
Distance		-			m

Mechanical Drawing

WFHL6108UA-A

Tolerance: ±0.2mm
Unit: mm
H：2.4mm

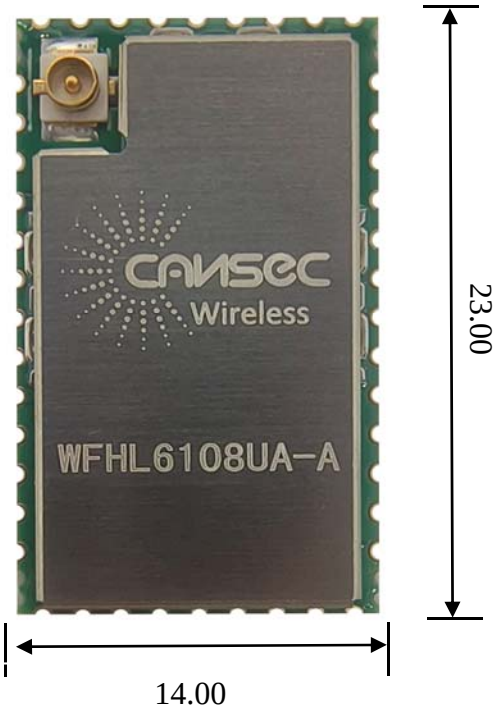

Terminal Description

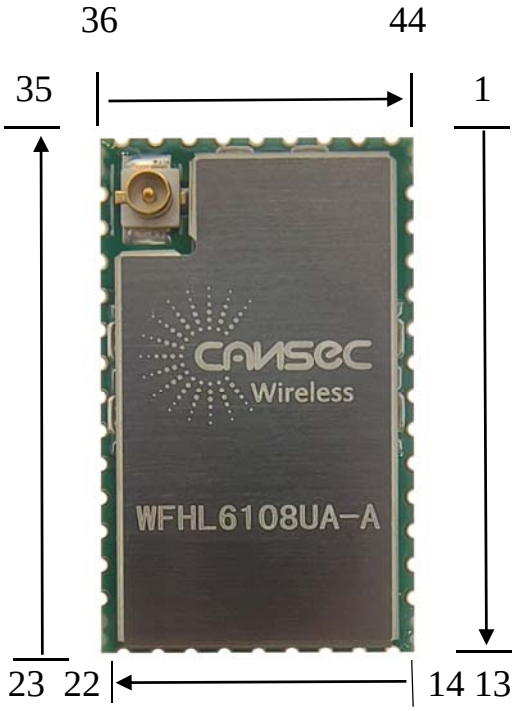

Pad Number	Name	Pin Type	Description
1	GND	Power	Ground
2	GND	Power	Ground
3	GND	Power	Ground
4	GND	Power	Ground
5	GND	Power	Ground
6	JTAG_TCK	I	JTAG Clock
7	JTAG_TDI[1]	I	JTAG Data In
8	NC	NC	Do Not Connect
9	JTAG_TMS[1]	I	JTAG Mode Select
10	JTAG_TRST_N	I	JTAG Reset
11	JTAG_TDO[1]	O	JTAG Data Out
12	NC	NC	Do Not Connect
13	NC	NC	Do Not Connect
14	GND	Power	Ground
15	GPIO_9 [2]	I/O	GeneralPurpose IO9
16	GPIO_8 [2]	I/O	General Purpose IO8
17	GPIO_7 [2]	I/O	General
18	SDIO_D1 [3]	I/O	SDIO D1

Pad Number	Name	Pin Type	Description
19	SDIO_D0 [3]	I/O	SDIO D0
20	SDIO_CLK	I/O	SDIO Clock
21	VDD_IO	Power	3.3V VDD_IO Supply
22	GND	Power	Ground
23	SDIO_CMD [3]	I/O	SDIO Command
24	SDIO_D3 [3]	I/O	SDIO D3
25	SDIO_D2 [3]	I/O	SDIO D2
26	GPIO_6 [2]	I/O	General Purpose IO6
27	VBAT	Power	3.3V VBAT Supply
28	GND	Power	Ground
29	GPIO_5 [2]	I/O	General Purpose IO5
30	GPIO_4 [2]	I/O	General Purpose IO4
31	GPIO_3 [2]	I/O	General Purpose IO3
32	VDD_FEM	Power	3.3V Frontend Module Supply
33	GND	Power	Ground
34	GPIO_2 [2]	I/O	General Purpose IO2
35	GPIO_1 [2]	I/O	General Purpose IO1
36	GND	Power	Ground
37	BUSY	O	Wi-Fi BUSY
38	RESET_N [4]	I	System Reset
39	WAKE [4]	I	Wake
40	GND	Power	Ground
41	GND	Power	Ground
42	GND	Power	Ground
43	ANT	Analog	Antenna ※This pin only has a signal in the NA version. If it is UA, this pin is in an OPEN state.
44	GND	Power	Ground

[1] JTAG pins should be tied to GND via a 10k pull down resistor
[2] All unused GPIO should be tied to GND via a 10k pull down resistor
[3] All SDIO bus pins except SDIO_CLK should be pulled up with a 10k-100k resistor as perthe the SDIO standard
[4] Supplied from VBAT domain. Other digital pins are driven by the VDDIO domain.

Power Supply Requirements

WFHL6108 module power is derived from a 3.0 to 3.6V supply on the VBAT pin and a 3.0 to 4.3V supply on the VDD_FEM pin. VBAT powers the module's internal circuitry, while VDD_FEM powers the onboard ultra-long-range power amplifier. The module's transmitter power output can be increased by raising the supply voltage on the VDD_FEM pin to 4.3V, although this will increase overall power consumption.

VDDIO sets the IO voltage of the WFHL6108 , which should be connected to the same power supply as the host MCU. The VDDIO voltage must be between 1.62V and 3.6V and must not exceed the voltage applied to VBAT.

SDIO Host Requirements

When selecting a CPU host to interface with the WFHL6108 module via the SDIO interface, ensure the host supports SDIO 2.0 with SDIO clock speeds of up to 50 MHz. Slower clock speeds will impact the maximum achievable throughput.

The SDIO data and command lines should be pulled up with 10k-100k resistors per the SDIO 2.0 specification.

Most applications will benefit from the module's power-saving features. Two GPIOs, set as CMOS outputs, are required to drive the RESET and WAKE signals. A third GPIO, set as a CMOS input, is needed to receive the BUSY signal from the module.

In applications where the module must always be on, and the power-saving features can not be used, such as access points, the WAKE pin can be fixed to VBAT, reducing the need for GPIOs on the host processor to only one.

A schematic diagram detailing the recommended SDIO host interface circuit using the module's power-saving features is shown below:

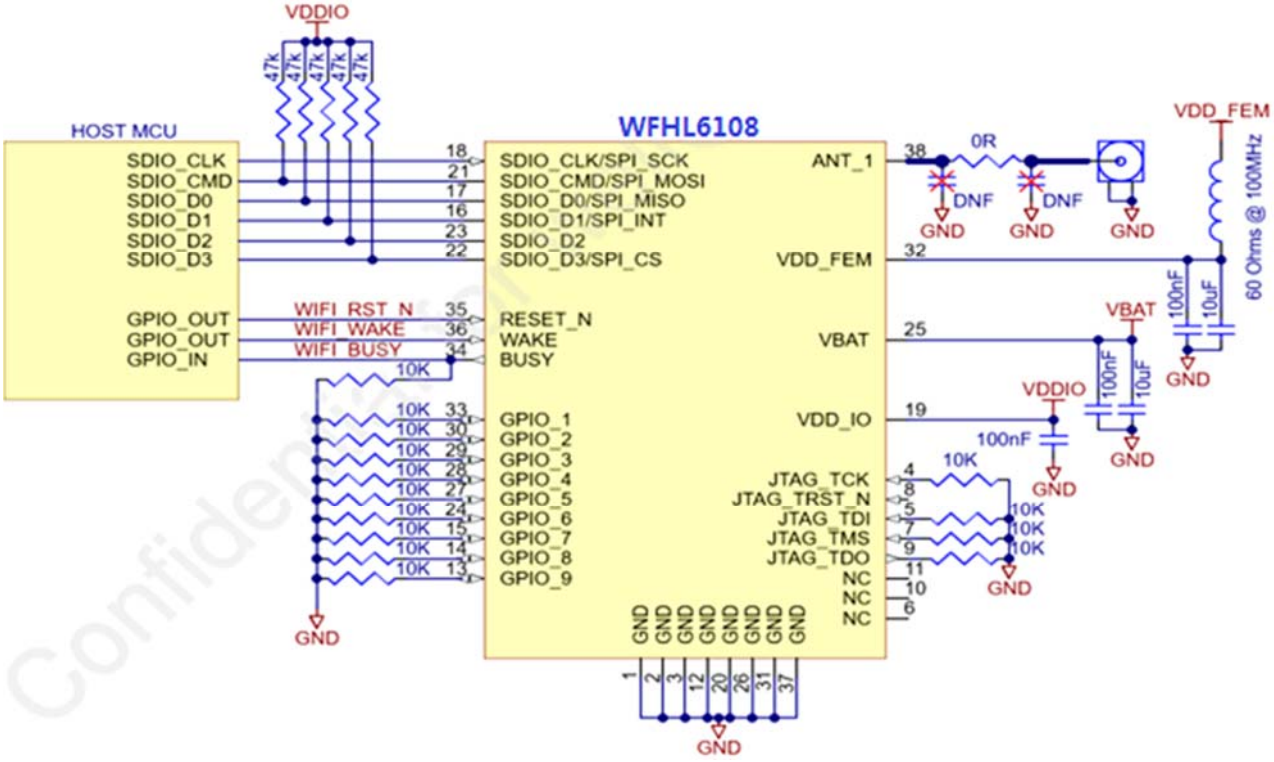

Recommended SDIO host interface circuit using power-saving features

A schematic diagram detailing the recommended SDIO host interface circuit for always-on applications is shown below:

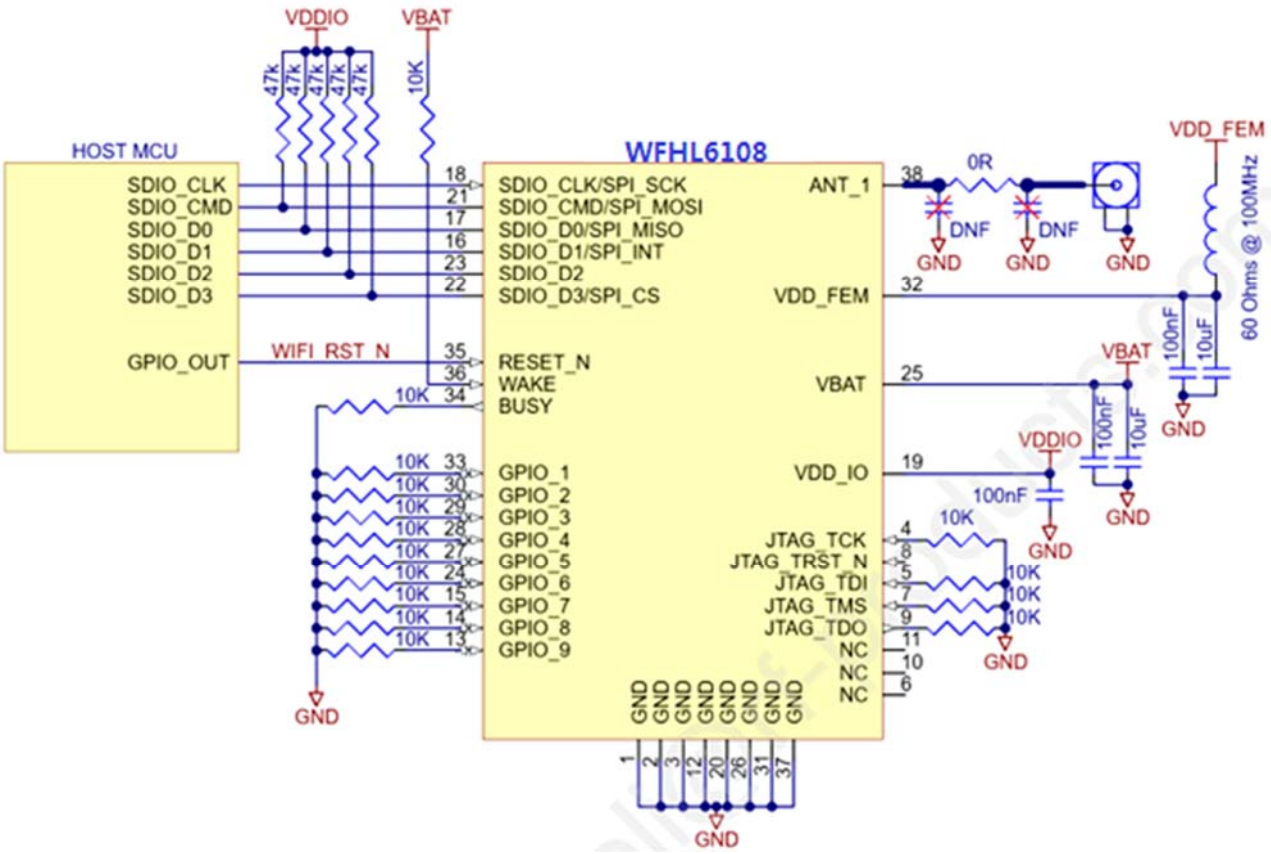

Recommended SDIO host interface circuit for always-on applications

SPI Host Requirements

When selecting a CPU host to interface via SPI to the WFHL6108 module, consider the following recommendations to achieve the best throughput:

- The host should support level-triggered interrupts.
- The host should support full-duplex SPI mode.
- The host should support DMA-backed transactions on the SPI bus.

Standard SPI can achieve up to 25 Mbps at 50 MHz, but this will be significantly reduced without DMA support. For example, an SPI interface with an 8-byte buffer per transaction might only achieve 2 Mbps throughput on the SPI bus.

Most applications will benefit from the module's power-saving features. Two GPIOs, set as CMOS outputs, are required to drive the RESET and WAKE signals. A third GPIO, set as a CMOS input, is needed to receive the BUSY signal from the module.

In applications where the module must always be on, and the power-saving features can not be used, such as access points, the WAKE pin can be fixed to VBAT, reducing the need for GPIOs on the host processor to only one.

A schematic diagram detailing the recommended SPI host interface circuit using the module's power-saving features is shown below:

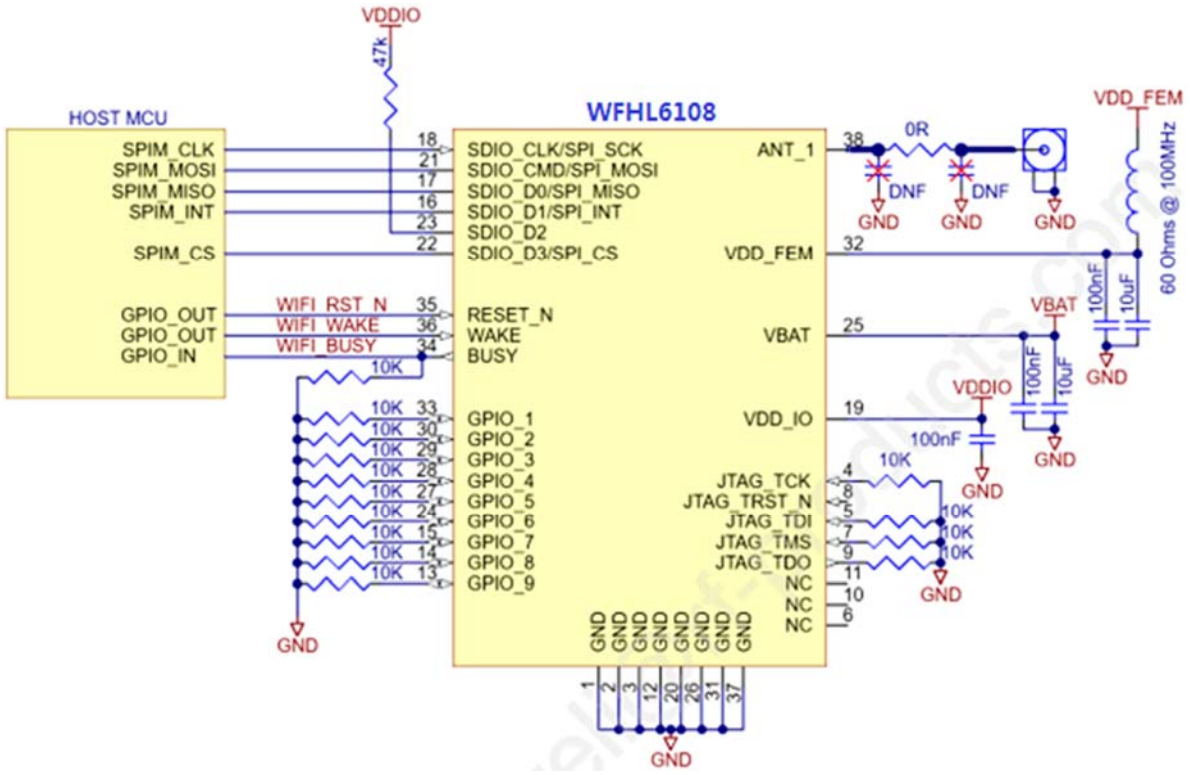

Recommended SPI host interface circuit using power-saving features

A schematic diagram detailing the recommended SPI host interface circuit for always-on applications is shown below:

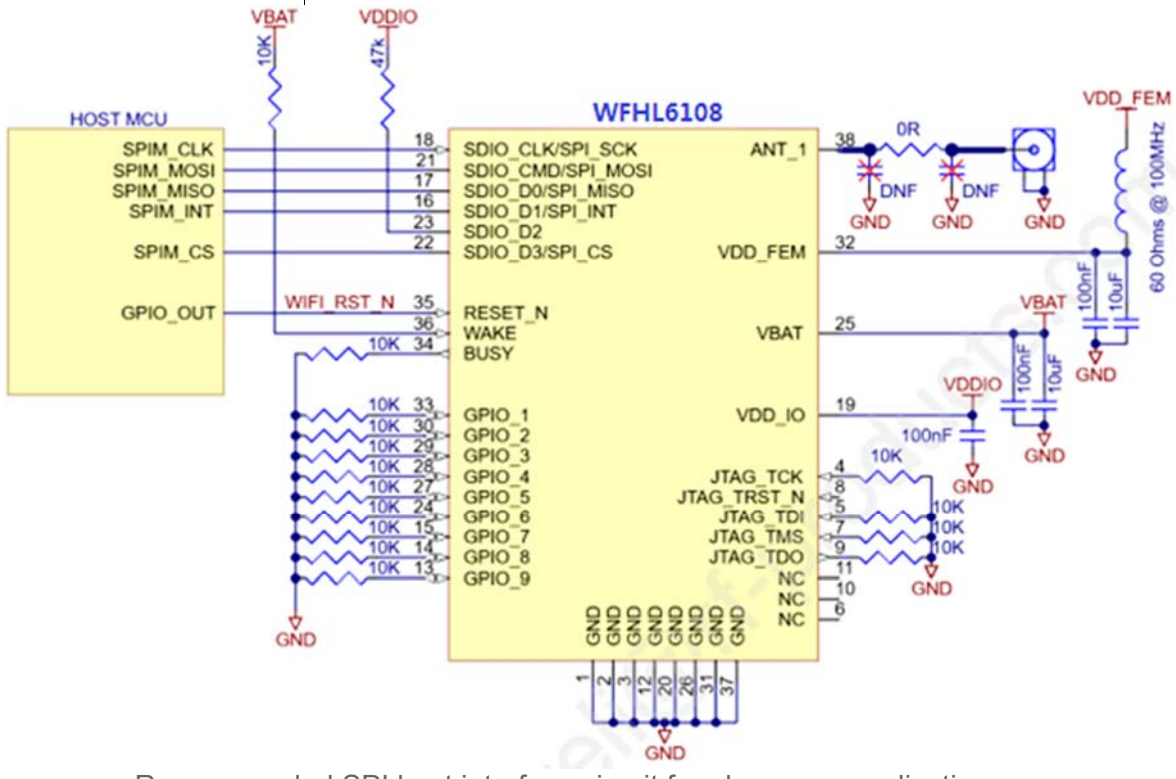

Recommended SPI host interface circuit for always-on applications

Digital Interfaces

All unused digital IO pins must be pulled up or down to prevent floating pins. Failure to do so will result in a higher leakage current on the VDDIO supply.

RF Specifcations

The WFHL6108 radio operates in the frequency range from 850 MHz to 950 MHz, covering the upper sub-11GHz band.

Region	Sub 1 GHz bands available(MHz)	Total BW available(MHz)
USA	902-928	26
Japan	915.9-928.1	11
Europe	863-868 917.4-919.4	7
Australia	915-928	13
Singapore	866-869 920-925	8
India	865-868	3

※Global frequency bands

Reference Schematics

VCC Wide Supply Voltage Range:3.0 to 3.6V

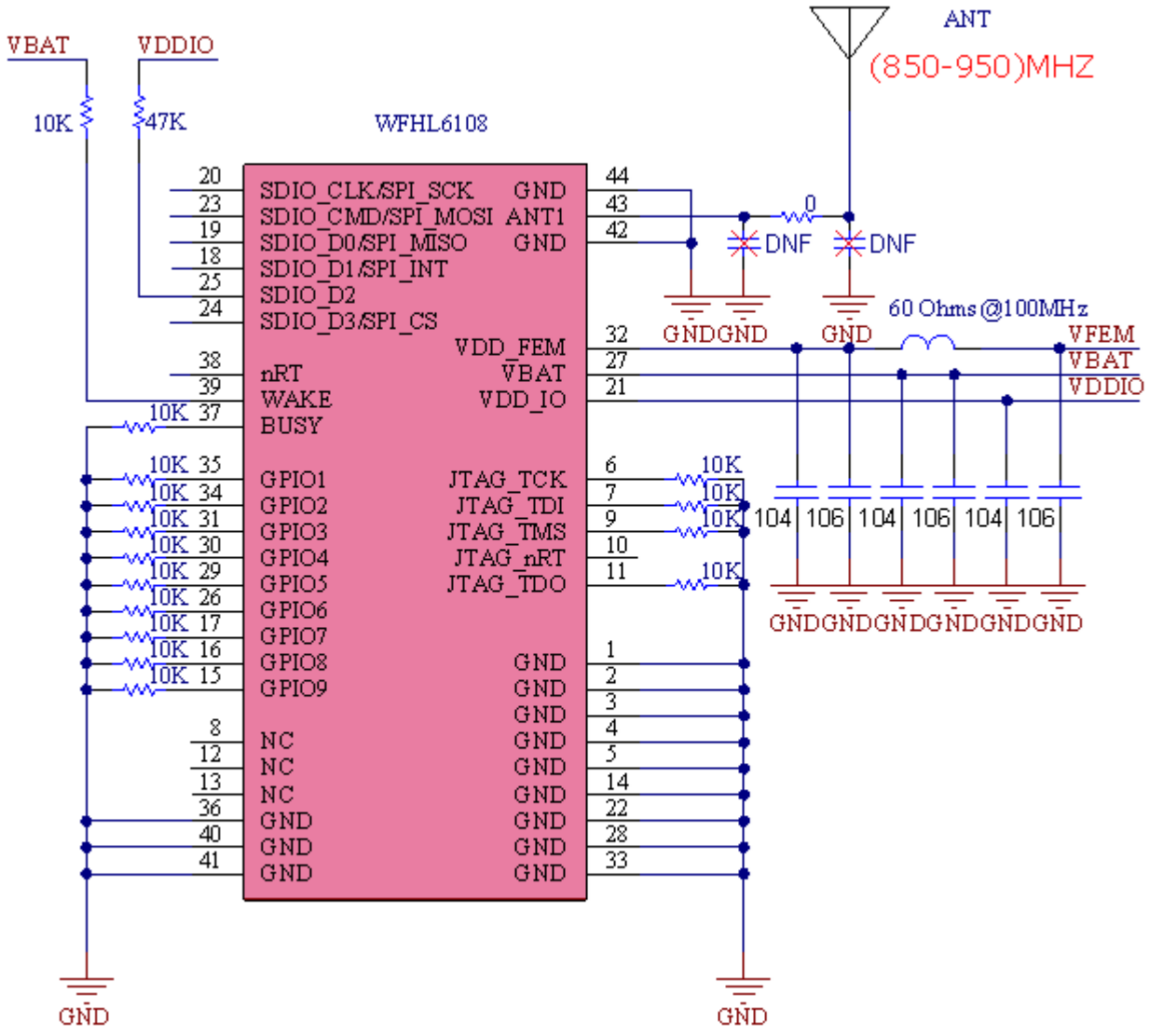

Recommended PCB Layout for Package

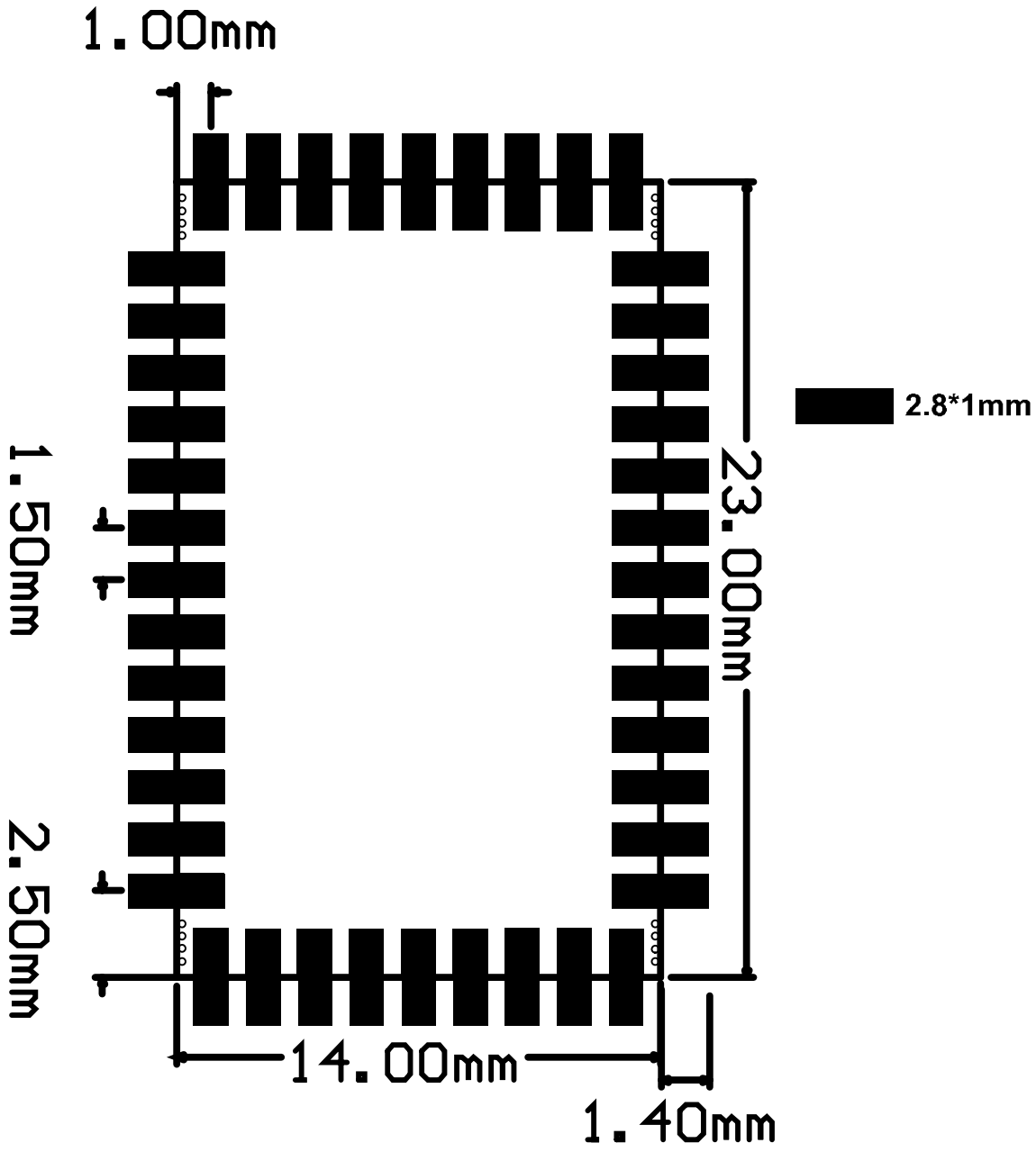

Recommended Reflow Profile for Lead Free Solder

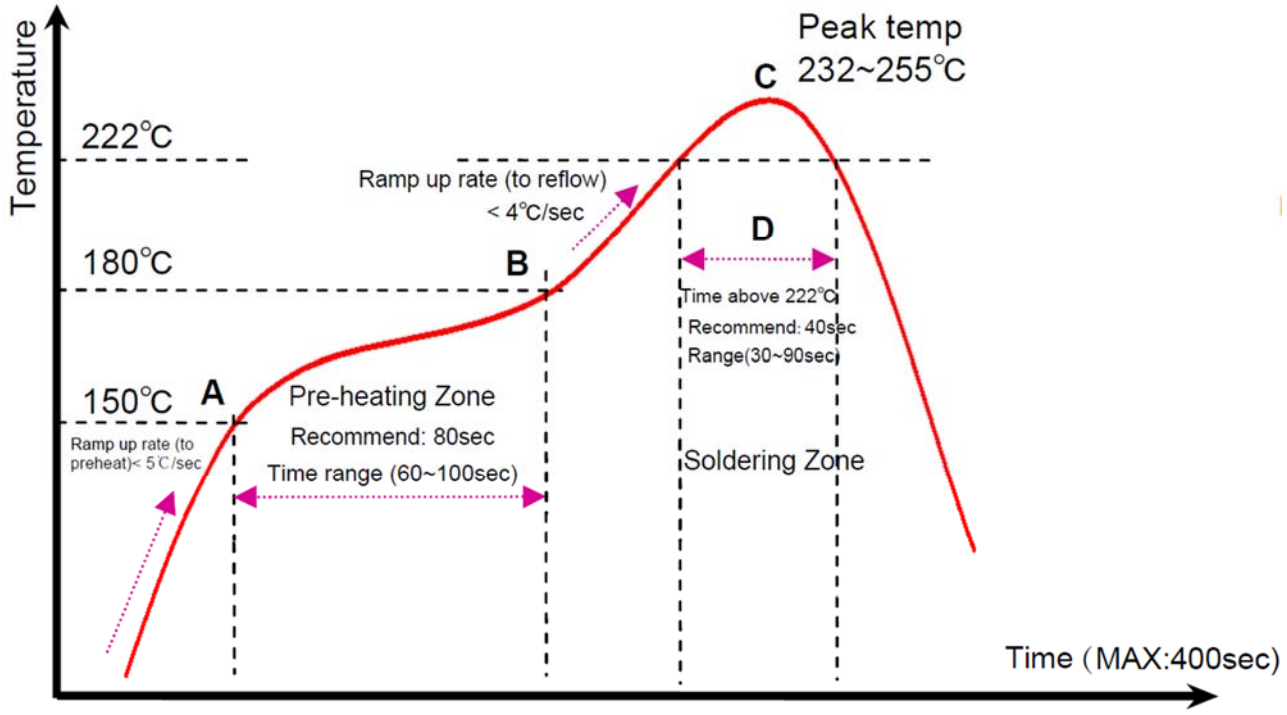

Package

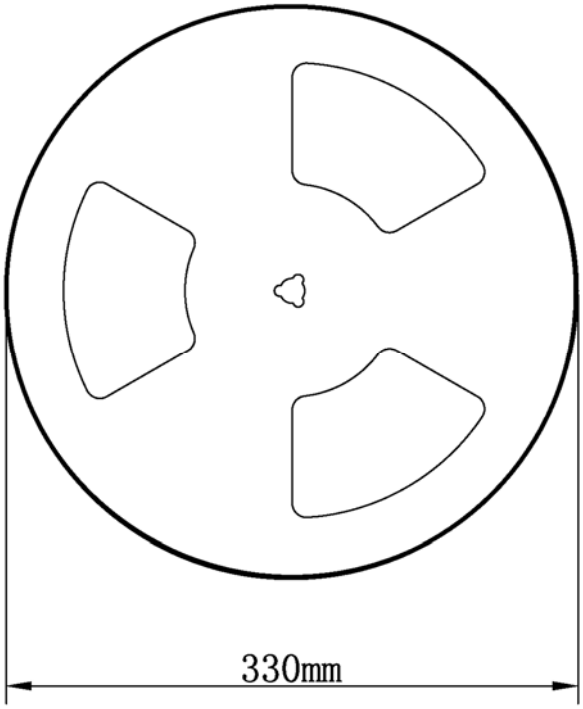

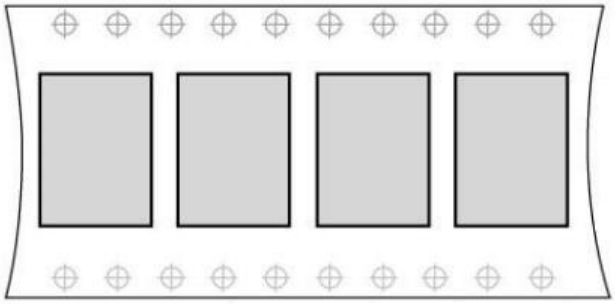

- Tape and Reel：800pc/ T&R.
- Helical antenna version Module exception.
- Note： For package, we have three package types: Reel, Tray, Simple way for choosing, depend on customer's request or quantity request.

Contact Details

Tel: +86-10-6888 9971

Email: sarolyn@rf-products.com

grace@rf-products.com

norman@rf-products.com

Technical Support: tech@rf-products.com

Addr: Rm.1002, Block B China Railway Venture building, No.28 Pingguoyuan Rd., Shijingshan District, Beijing, 100041,China.

Website: www.rf-products.com