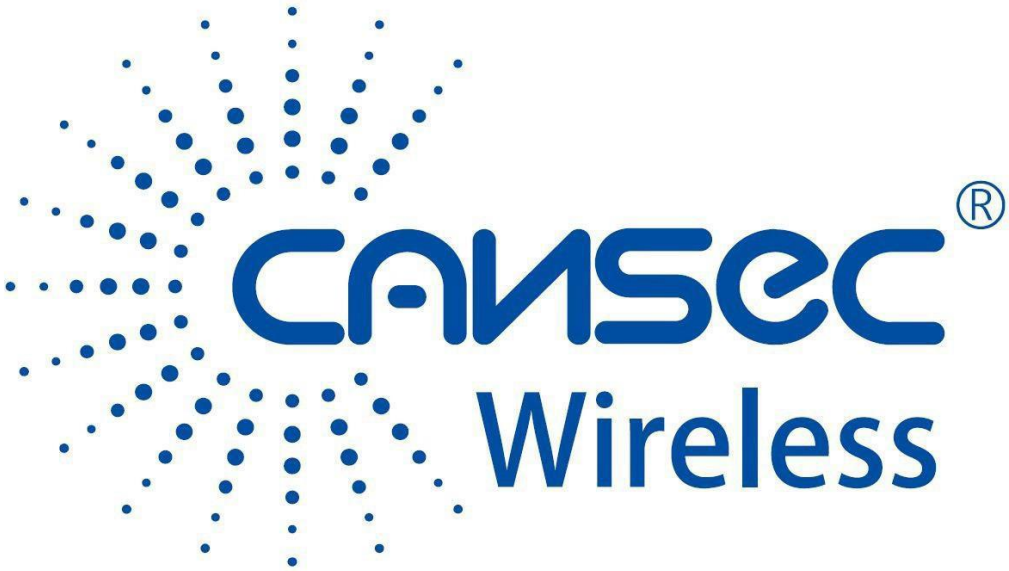

AN2745UA-A Module Datasheet V1.0

Beijing Jia An Electronics Technology Co., Ltd.

CONTENTS

History 1

Features 2

Applications 3

Description 3

Block Diagram 4

Module Name Information 4

Specifications 5

Mechanical Drawing 6

Terminal Description 6

Reference Schematics 8

Recommended PCB Layout for Package 9

Recommended Reflow Profile for Lead Free Solder 10

Package 11

Contact Details 12

History

Date	Version	Description	Draft	Approval
2025-7-18	V1.0	Release	Keytone	Jessy

Features

Wireless MCU processing elements

- Arm® Cortex®-M33 processor (96MHz) with FPU (floating point unit), TrustZone®-M support, and CDE (custom datapath extension) for machine learning acceleration
- Algorithm Processing Unit (APU) (96MHz)
  - Mathematical accelerator for efficient vector and matrix operations
  - Bluetooth® Channel Sounding post-processing support for IFFT and advanced super-resolution algorithms such as MUltiple Signal Classification (MUSIC)

Wireless MCU memory

- Up to 1MB of in-system programmable flash
- Up to 162KB of SRAM
- 32KB of System ROM with secure boot root of trust (RoT) and a serial (SPI/UART) bootloader
- Serial wire debug (SWD)

MCU peripherals

- 3 × 16-bit and 1 × 32-bit general-purpose timers, quadrature decode mode support
- Real-time clock (RTC)
- Watchdog timer
- System timer for radio, RTOS, and application
operations for Bluetooth® channel sounding postprocessing
- 12-bit ADC, up to 1.2MSPS, eight external inputs
- Temperature sensor and battery monitor
- 1× low-power comparator
- 2× UART with LIN capability
- 2× SPI
- 1× I2C
- 1× I2S
- 1× CAN-FD controller with CAN/CAN-FD ISO 16845-1:2016 certification compliance

Wireless protocol support

- Bluetooth® Core 6.0 Qualified
  - Support for Bluetooth® Channel Sounding (High Accuracy Distance Measurement)

High-performance radio

- 2.4GHz RF transceiver compatible with Bluetooth®Low Energy specification
- Output power up to +10dBm (R version)
- Integrated BALUN
- Integrated RF switch
- Receiver sensitivity:
  - Bluetooth® LE 125kbps: –103dBm
  - Bluetooth® LE 1Mbps: –97dBm

Operating ranges

- Junction temperature TJ: –20°C to 70°C
- Wide supply voltage range 1.71V to 3.8V

Applications

- Automotive
  - Car access and security systems
    - Digital key
    - Phone as a key (PaaK)
    - Passive entry passive start (PEPS)
    - Remote keyless entry (RKE)

Description

The AN2745UA-A is designed based on CC2745R10-Q1
These devices are optimized for low-power wireless communication in applications such as car access, including passive entry passive start(PEPS), phone as a key (PaaK), and remote keyless entry (RKE). The key features of this device include:

- Support for features in Bluetooth® 6.0 and earlier versions:
  - LE Coded PHYs (Long Range), LE 2Mbit PHY (high speed), advertising extensions, multiple advertisement sets, CSA#2, as well as backward compatibility with earlier Bluetooth® Low Energy specifications
- Bluetooth® Channel Sounding technology support and Algorithm Processing Unit (APU) to enable high accuracy, low cost, and secure phase-based ranging mechanism for distance estimation.
  - APU enables latency and power-efficient execution of distance-ranging signal processing algorithms, including FFT and super-resolution complex algorithms like MUltiple SIgnal Classification (MUSIC)
- Arm®Custom Data Extension (CDE) instruction support for machine learning acceleration Development Kit (SDK)
- Advanced security features for connected wireless MCUs:
  - An isolated HSM environment with a dedicated controller handling accelerated cryptographic and random number generation operations
  - Secure boot and firmware updates with the root of trust enabled by an immutable system ROM
  - Arm® Cortex M33 TrustZone-M based trusted execution environment support
  - Secure key storage support with HSM and TrustZone-M
  - Hardware fault sensors to mitigate low-cost, low-effort, non-invasive physical attack threats like voltage glitch injection
  - Dedicated AES-128 HW accelerator for handling timing-critical link-layer encryption/decryption operations
- Ultra-low standby current with full 162KB SRAM retention and RTC operation that enables significant battery
life extension, especially for applications with longer sleep intervals
- Extended temperature support with the lowest standby current
- Excellent radio sensitivity and robustness (selectivity and blocking) performance for Bluetooth® Low Energy

Block Diagram

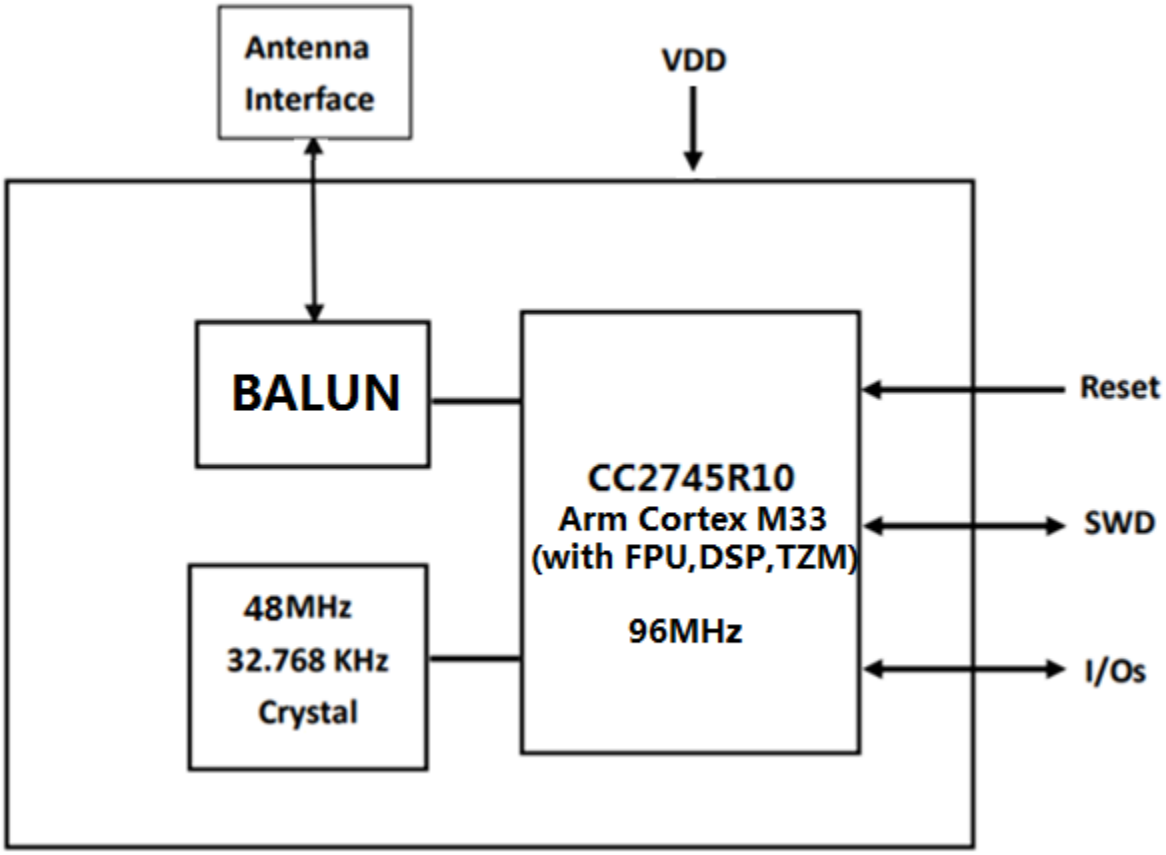

Module Name Information

AN - 2745 - UA - A

Module Type:	Chip Type:	Antenna Type:	PCB Version
Air Nerve	CC2745R10	UA:UFL Connector SA:Strip Antenna	

Specifications

Vcc=3.3V

Parameter		Min	Typ	Max	Unit
Operating Voltage		**1.71**	**3.3**	**3.8**	**V**
Operating Temperature		**-20**	**-**	**+70**	**℃**
Current Consumption	**Sleep Mode**	**-**	**-**	**1**	**uA**
	Receive mode	**-**		**6.1**	**mA**
	Transmit Mode	**-**		**24.5**	**mA**
TX Power		**-**		**10**	**dBm**
RX Sensitivity		**-**	**-**	**-103**	**dBm**
Distance		120			**m**

Mechanical Drawing

AN2745UA-A

Unit: mm
H：2.5mm

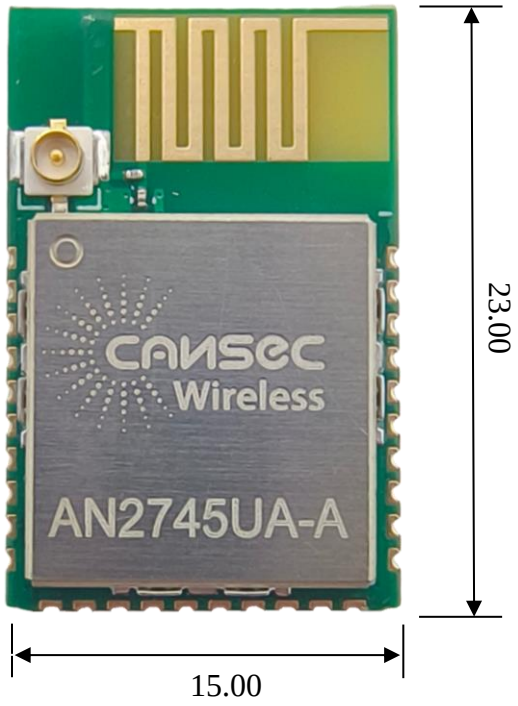

Terminal Description

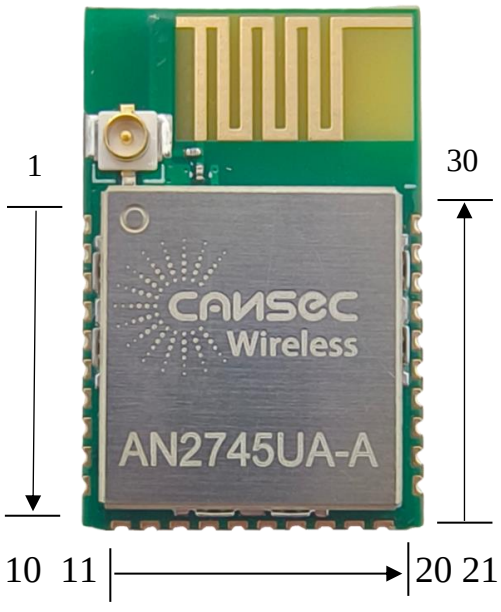

Pad Number	Name	Pin Type	Description
1	GND	Power	Ground
2	GND	Power	Ground
3	DIO0	Digital I/O	GPIO
4	DIO1	Digital I/O	GPIO
5	DIO2	Digital I/O	GPIO, high-drive capability
6	DIO3	Digital I/O	GPIO, high-drive capability
7	DIO4	Digital I/O	GPIO
8	DIO5	Digital I/O	GPIO
9	DIO7	Digital I/O	GPIO
10	GND	Power	Ground
11	+3V3	Power	1.71V to 3.8V split rail I/O supply
12	GND	Power	Ground
13	SWDIO	Digital I/O	GPIO, SWD interface: mode select or SWDIO, high-drive capability
14	SWCLK	Digital I/O	GPIO, SWD interface: serial wire clock, high-drive capability
15	DIO11	Digital I/O	GPIO
16	DIO12	Digital I/O	GPIO
17	DIO15	Digital I/O	GPIO
18	DIO16	Digital I/O	GPIO
19	DIO17	Digital I/O	GPIO, analog capability, high-drive capability
20	DIO18	Digital I/O	GPIO, analog capability, high-drive capability
21	GND	Power	Ground
22	DIO23	Digital or Analog	GPIO, 32kHz crystal oscillator pin 1, optional TCXO input
23	DIO24	Digital or Analog	GPIO, 32kHz crystal oscillator pin 2
24	DIO19	Digital or Analog	GPIO, analog capability
25	DIO20	Digital or Analog	GPIO, analog capability
26	DIO21	Digital or Analog	GPIO, analog capability
27	DIO22	Digital or Analog	GPIO, analog capability
28	nRT	Digital	Reset, active low.
29	DIO27	Digital or Analog	GPIO, analog capability
30	DIO28	Digital or Analog	GPIO, analog capability

Reference Schematics

VCC Wide Supply Voltage Range:1.71 to 3.8V

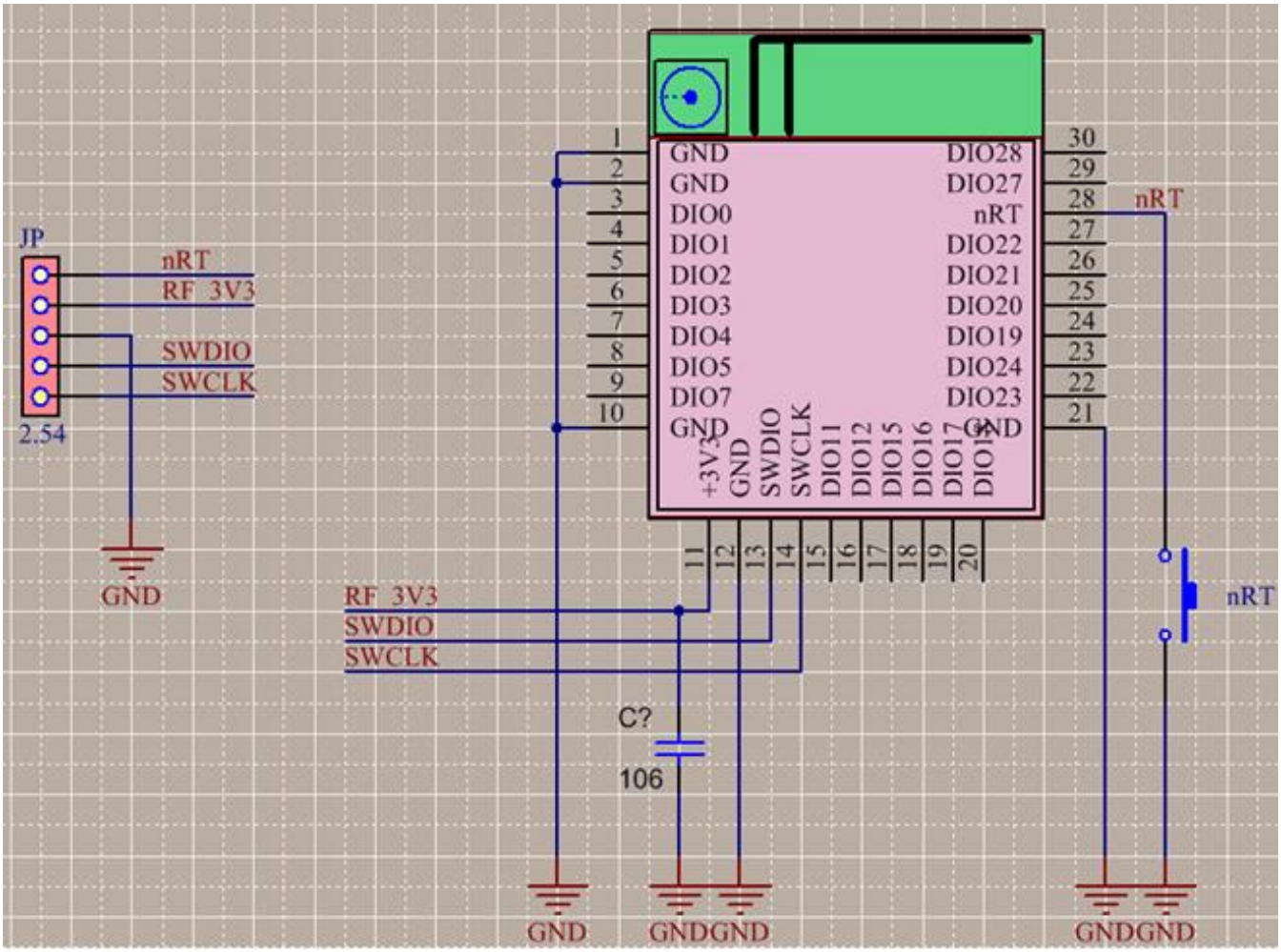

Recommended PCB Layout for Package

NOTE:
If using the PCB antenna please make sure in the shadow area shall without any wiring or ground.

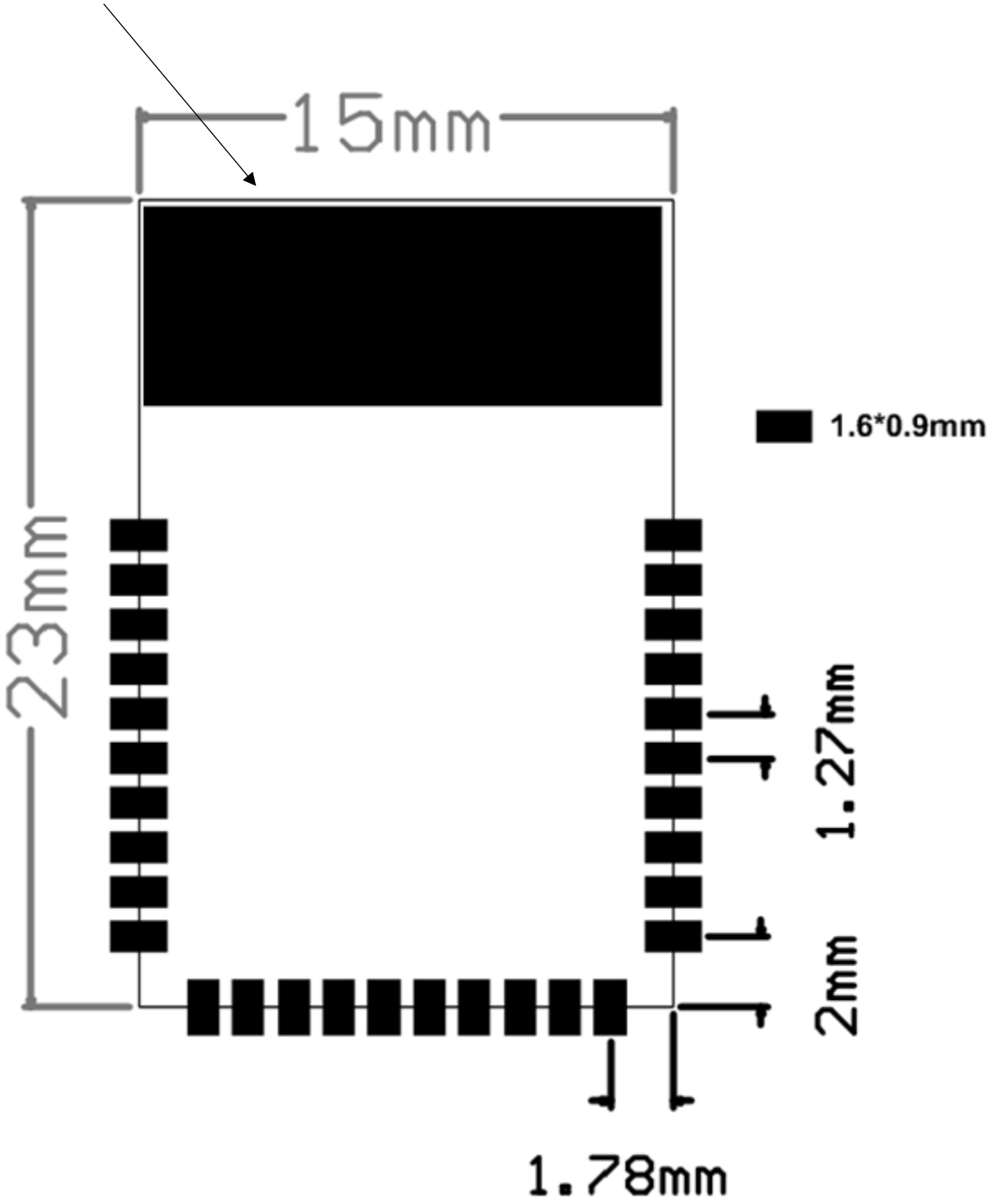

Recommended Reflow Profile for Lead Free Solder

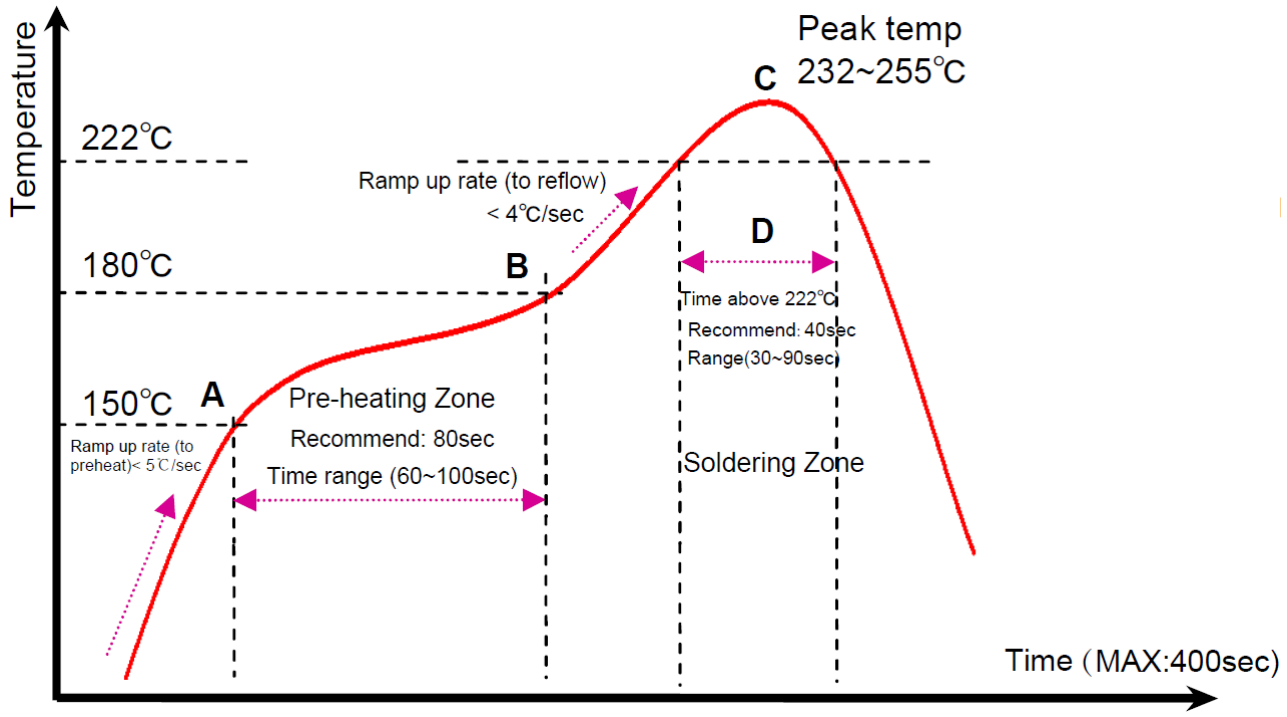

Package

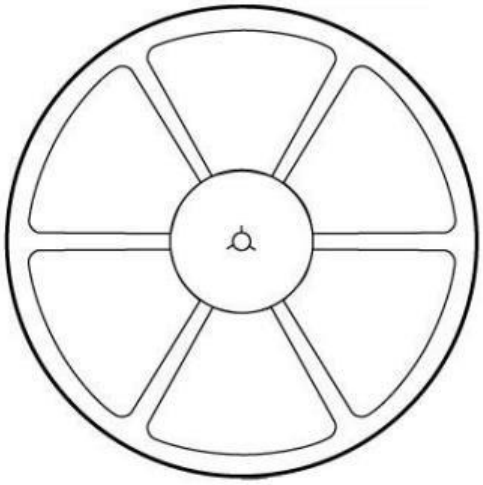

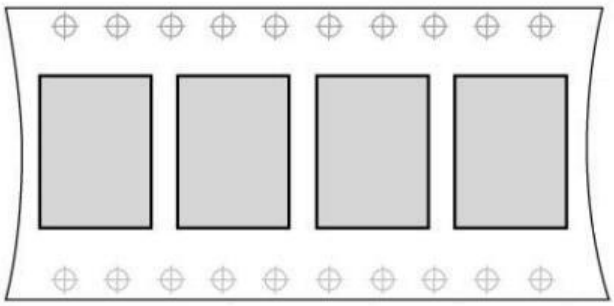

- Tape and Reel
- Helical antenna version Module exception
- Note： For package, we have three package types: Reel, Tray, Simple way for choosing, depend on customer's request or quantity request

Contact Details

Tel: +86-10-6888 9971
Email: sarolyn@rf-products.com
grace@rf-products.com
norman@rf-products.com
Technical Support: tech@rf-products.com
Addr: Rm.1002, Block B China Railway Venture building, No.28 Pingguoyuan Rd., Shijingshan District, Beijing, 100041,China.
Website: www.rf-products.com